RESTRICTED

THE INFORMATION GIVEN IN THIS DOCUMENT IS NOT TO BE COMMUNICATED, EITHER DIRECTLY OR INDIRECTLY, TO THE PRESS OR TO ANY PERSON NOT AUTHORIZED TO RECEIVE IT.



# ILLUSTRATED
# RAEME MAINTENANCE SCALE

FOR

# EQUIPMENT, 9-mm OWEN machine carbine, Mk.2
# B3/BCA 0801

DOS ANQ

READ PREFACE

1960

MAINTENANCE SCALE AUST/SA/106/2
Notified in AAO's dated 30th April, 1960.

This Scale supersedes Scale Aust/SA/106/1 dated March 1958.

RESTRICTED
The information given in this document is not to be communicated, either directly or indirectly, to the Press or to any person not authorised to receive it.

# RAEME MAINTENANCE SCALE

## (COMBINED MAINTENANCE SCALE AND PROVISION SCHEDULE)

## EQUIPMENT, 9 MM OWEN Machine carbine, Mk 2
## B3/BCA 0801

## CARBINE, Machine, OWEN, 9 MM, Mk 2/3,
## B3/BCA 0423

PREPARED BY:- RAEME SCALES SECTION
APPROVED BY:- DIRECTORATE OF ELECTRICAL AND MECHANICAL ENGINEERING.
ISSUED BY:- DIRECTORATE OF ORDNANCE SERVICES UNDER DIRECTION OF THE MILITARY BOARD.

| Amendment | Date Issued | Entered |
|---|---|---|
| A | | |
| B | | |
| C | | |
| D | | |
| E | | |
| F | | |

# P R E F A C E

USE OF SCALE :-

1. To aid the identification of components and assemblies by those responsible for operating, repairing or storing this equipment.

2. To provide the Directorate of Ordnance Requirements with a basis for procurement and subsequent provision action for this equipment.

3. To provide the Directorate of Ordnance Services and all stock holding units with a basis for provision action and distribution of stock.

BASIS OF SCALE:-

1. Every assembly and component part of the equipment is listed and the following information is shown against those items normally stocked :-

   (a) The maintenance rate for each item, i.e. the quantity of each item required to maintain 100 equipments for 12 months in Peace or War.

   (b) The initial stock quantity of each item to be held by field stock holding units according to the number of equipments being serviced.

2. Only those items for which a maintenance rate is shown will normally be purchased and stocked by ordnance depots. If items beyond this range are required a request for their inclusion in the scale should be made to DOS (RAEME SCALES SECTION). If after examination the item is classed as maintainable, the scale will be amended accordingly. Scales change request forms (AA F-F132) should be used for this purpose.

ISSUING AUTHORITY:- This illustrated maintenance scale is issued by MGO Branch, AHQ.

AMENDMENTS :- Amendments to this document will be notified in AAO's.

# COLUMN INDEX

| No. | |
|---|---|
| 1 | Item No. |
| 2 | Designation |
| 3 | Stock No. |
| 4 | No. off. |
| 5 | Primary packed quantity |
| 6 | Type of repair:- U - Unit repair item<br>F - Field repair item<br>B - Base repair item<br>B(1) Base repair item not normally held outside COD. |
| 7 | Maintenance rate per 100 equipments 12 months Peace. |
| 8 | Maintenance rate per 100 equipments 12 months War |
| 9 | Initial stocks 1 month LAD servicing 1 - 5 equipments |
| 10 | Initial stocks 1 month LAD servicing 6 - 15 equipments |
| 11 | Initial stocks 1 month LAD servicing 16 - 30 equipments. |
| 12 | Initial stocks 2 months OFP servicing 1 - 10 equipments |
| 13 | Initial stocks 2 months OFP servicing 11 - 25 equipments |
| 14 | Initial stocks 2 months OFP servicing 26 - 50 equipments |
| 15 | Initial stocks 2 months OFP servicing 51 - 100 equipments |
| 16 | Initial stocks 2 months Workshop stores section to Workshop servicing 1 - 10 equipments. |
| 17 | Initial stocks 2 months Workshop stores section to Workshop servicing 11 - 25 equipments |
| 18 | Initial stocks 2 months Workshop stores section to Workshop servicing 26 - 50 equipments |
| 19 | Initial stocks 2 months Workshop stores section to Workshop servicing 51 - 100 equipments |
| 20 | Remarks |

NOTE:- An "X" in column 9 - 19 indicates that this item is not stocked but may be drawn as required.
A blank indicates that the item will not be drawn as it is beyond the normal scope of that line workshop.

## PLATE INDEX

| PLATE | ILLUSTRATION |
|---|---|
| KEY PLATE | CARBINE, MACHINE, OWEN, 9mm, Mk.2/3 |
| A | BARREL GROUP |
| B | BODY AND BOLT GROUP |
| C | HOUSING AND TRIGGER MECHANISM GROUP |
| D | BUTT GROUP |
| E | BAYONET AND SCABBARD GROUP |
| F | ACCESSORIES |

NOTE : - ITEMS MARKED * ARE NOT ILLUSTRATED.

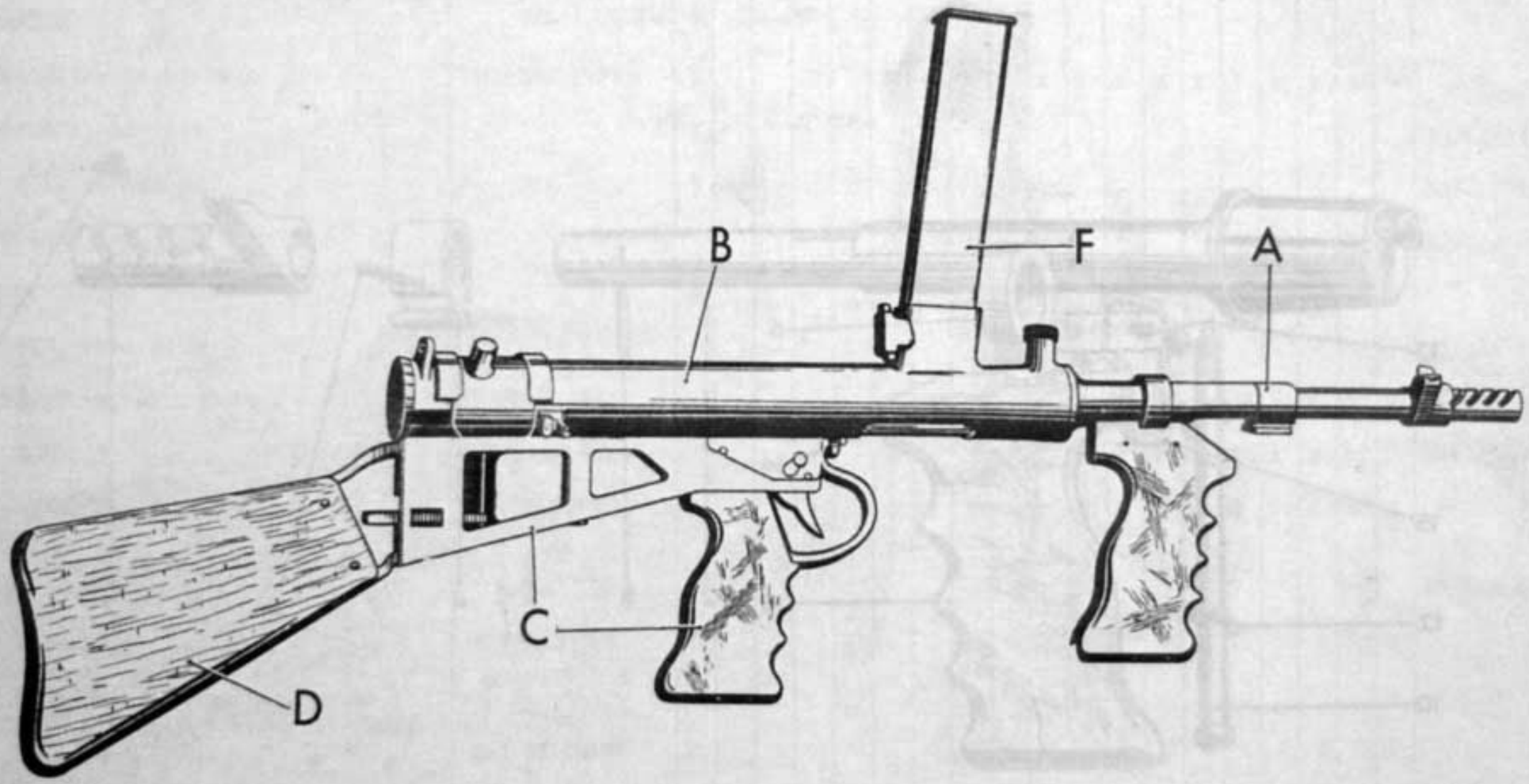
B
F
A
C
D

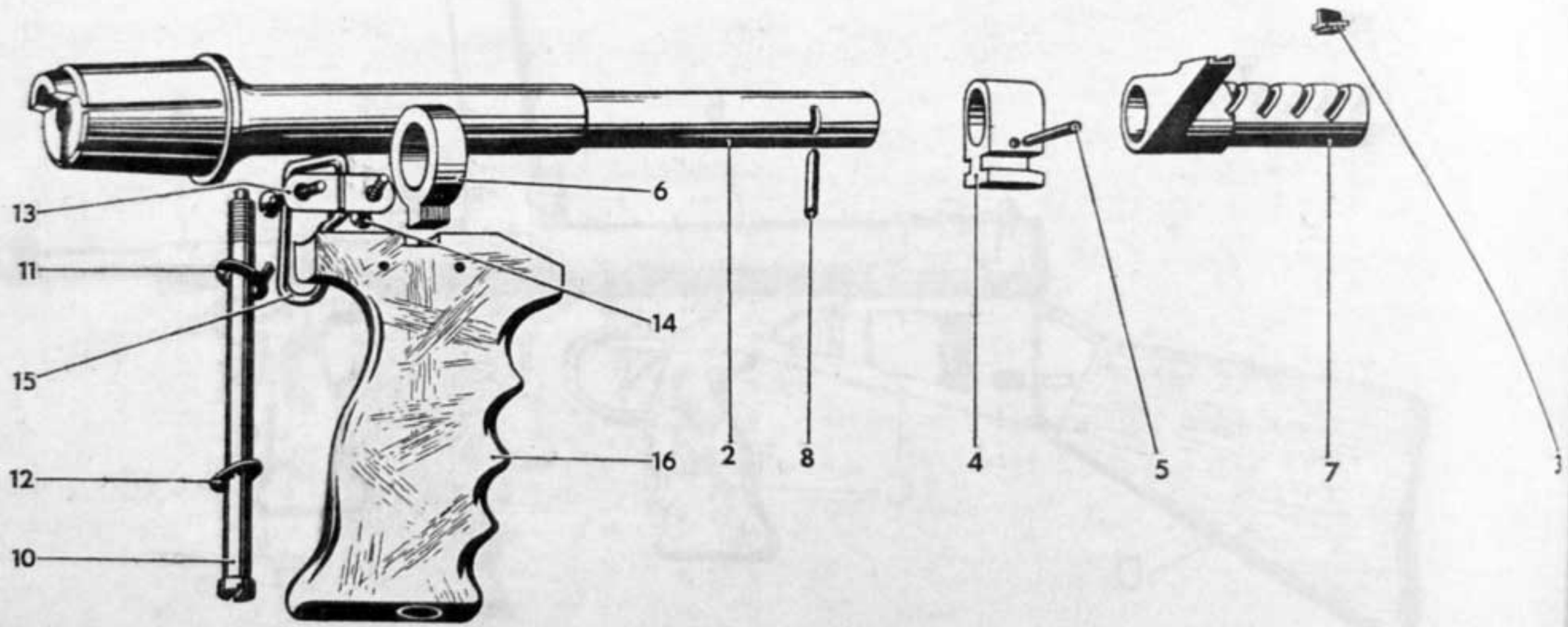
13
11
15
12
10
6
14
16
2
8
4
5
7
3

| ITEM OR PLATE NO. | DESIGNATION | Stock No. | No. OFF 4A | 4B | 4C | 4D | O.S.P. | TYPE OF REPAIR | 12 MTHS MTCE 100 EQPTS P | W | INITIAL STOCKS: 1 MTH. LAD. 1 TO 5 | 6 TO 15 | 16 TO 30 | 2 MTHS. OFP. 1 TO 10 | 11 TO 25 | 26 TO 50 | 51 TO 100 | 2 MTHS WKSP STORES SEC. 1 TO 10 | 11 TO 25 | 24 TO 50 | 51 TO 100 | REMARKS |
|---|---|---|---|---|---|---|---|---|---|---|---|---|---|---|---|---|---|---|---|---|---|---|
| 1 | 2 | 3 | | | | | 5 | 6 | 7 | 8 | EQUIPMENTS 9 | 10 | 11 | 12 | 13 | 14 | 15 | 16 | 17 | 18 | 19 | 20 |
| A | CARBINE,machine,Owen,9mm Mk.2/3 | | | | | | | | | | | | | | | | | | | | | |
| 1* | BARREL, Mk.3, Assy. | | 1 | | | | | | | | | | | | | | | | | | | B3/CAA 1103A |
| 2 | BARREL | | 1 | | | | | | | | | | | | | | | | | | | |
| 3 | BLADE,foresight Mk.4 | B3/CAA 1121 | 1 | | | | | U | 3 | 6 | x | x | x | x | x | x | 1 | x | x | x | 2 | |
| 4 | BRACKET, bayonet | | 1 | | | | | | | | | | | | | | | | | | | B3/CAA 1104 |
| 5 | PIN, retaining | | 1 | | | | | | | | | | | | | | | | | | | B3/CAA 1530 |
| 6 | COLLAR | | 1 | | | | | | | | | | | | | | | | | | | B3/CAA 1565 |
| 7 | COMPENSATOR | | 1 | | | | | | | | | | | | | | | | | | | |
| 8 | PIN, retaining | | 1 | | | | | | | | | | | | | | | | | | | B3/CAA 1530 |
| 9* | GRIP,fore,9-mm, Owen | B3/CAA 1566 | 1 | | | | | U | 2 | 3 | x | x | x | x | x | x | 1 | x | x | x | 2 | |
| 10 | BOLT, fore-grip | B3/CAA 1564 | 1 | | | | | U | 2 | 4 | x | x | x | x | x | x | 1 | x | x | x | 2 | Mks 2 and 3 barrel |
| 11 | WASHER, lock | B3/CAA 1558 | 1 | | | | | U | 10 | 20 | x | x | 2 | x | x | 4 | 4 | x | x | 4 | 4 | |
| 12 | WASHER,spring,shakeproof,I.T. 5/16in. | | 1 | | | | | | | | | | | | | | | | | | | G1/GAA 4483 |
| 13 | BRACKET,sling,swivel | B3/CAA 1506 | 1 | | | | | U | 3 | 6 | x | x | x | x | x | x | 1 | x | x | x | 2 | |
| 14 | SCREW,self tapping,Parker Kalon,type Z,csk hd ,No.7 x 1/2-in. | Z2/ZBA 0129 | 2 | | | | | U | 8 | 10 | x | x | 2 | x | x | x | 4 | x | x | x | 4 | |
| 15 | SLING, swivel | | 1 | | | | | | | | | | | | | | | | | | | B3/CAA 1105 |
| 16 | GRIP, Mk.2 | | 1 | | | | | | | | | | | | | | | | | | | |

| ITEM OR PLATE NO. | DESIGNATION | Stock No. | NO. OFF 4A | 4B | 4C | 4D | P P Q | TYPE OF REPAIR | 12 MTHS MTCE 100 EQPTS P | W | INITIAL STOCKS 1 MTH. LAD. 1 TO 5 | 6 TO 15 | 16 TO 30 | 2 MTHS. OFF. 1 TO 10 | 11 TO 25 | 26 TO 50 | 51 TO 100 | 2 MTHS WKSP STORES SEC. 1 TO 10 | 11 TO 25 | 26 TO 50 | 51 TO 100 | REMARKS |
|---|---|---|---|---|---|---|---|---|---|---|---|---|---|---|---|---|---|---|---|---|---|---|
| 1 | 2 | 3 | 4A | 4B | 4C | 4D | 5 | 6 | 7 | 8 | 9 | 10 | 11 | 12 | 13 | 14 | 15 | 16 | 17 | 18 | 19 | 20 |
| B | BODY AND BOLT GROUP | | | | | | | | | | | | | | | | | | | | | |
| 1* | BODY | | | | | | | | | | | | | | | | | | | | | |
| 2 | CATCH, magazine | B3/CAA 1512 | 1 | | | | | F | 3 | 5 | | | | | | | | x | x | x | 2 | |
| 3 | RIVET | B3/CAA 1540 | 2 | | | | | F | 3 | 5 | | | | | | | | x | x | x | 2 | |
| 4 | FRAME | | 1 | | | | | | | | | | | | | | | | | | | |
| 5 | PIN, locking, barrel (Normal) | B3/CAA 1526 | 1 | | | | | U | 2 | 3 | x | x | x | x | x | x | 1 | x | x | x | 2 | |
| 6* | PIN, locking, barrel (0.010in. O.S.) | B3/CAA 1527 | A/R | | | | | U | 3 | 5 | x | x | 1 | x | x | x | 2 | x | x | x | 2 | |
| 7 | PIN, retaining (pin locking barrel) | B3/CAA 1532 | 1 | | | | | U | 3 | 5 | x | x | x | x | x | x | 1 | x | x | x | 2 | |
| 8 | PLUG, cork, barrel locking pin | B3/CAA 1513 | 1 | | | | | U | 6 | 12 | x | x | 1 | x | x | x | 2 | x | x | x | 4 | |
| 9 | SIGHT, aperture, rear | | 1 | | | | | | | | | | | | | | | | | | | B3/CAA 1545 |
| 10 | SPRING, barrel locking pin | B3/CAA 1551 | 1 | | | | | U | 5 | 10 | x | x | 1 | x | x | x | 2 | x | x | x | 4 | |
| 11 | SPRING, catch, magazine | B3/CAA 1547 | 1 | | | | | U | 5 | 10 | x | x | 1 | x | x | x | 2 | x | x | x | 4 | |
| 12* | BOLT, breech | B3/CAA 1501A | 1 | | | | | U | 2 | 3 | x | x | x | x | x | x | 1 | x | x | x | 2 | |
| 13 | BOLT | | 1 | | | | | | | | | | | | | | | | | | | |
| 14 | BOLT, cocking | B3/CAA 1502 | 1 | | | | | U | 3 | 5 | x | x | x | x | x | x | 1 | x | x | x | 2 | |
| 15 | PIN, retaining, cocking bolt | B3/CAA 1529 | 1 | | | | | U | 3 | 5 | x | x | x | x | x | x | 1 | x | x | x | 2 | |
| 16 | CIRCLIP, bolt, breech | B3/CAA 1514 | 1 | | | | | U | 2 | 3 | x | x | x | x | x | x | 1 | x | x | x | 2 | |
| 17 | EXTRACTOR, bolt, breech | B3/CAA 1517 | 1 | | | | | U | 3 | 5 | x | x | x | x | x | x | 1 | x | x | x | 2 | |
| 18 | PIN, retaining, extractor | B3/CAA 1531 | 1 | | | | | U | 6 | 12 | x | x | 2 | x | x | x | 4 | x | x | x | 4 | |

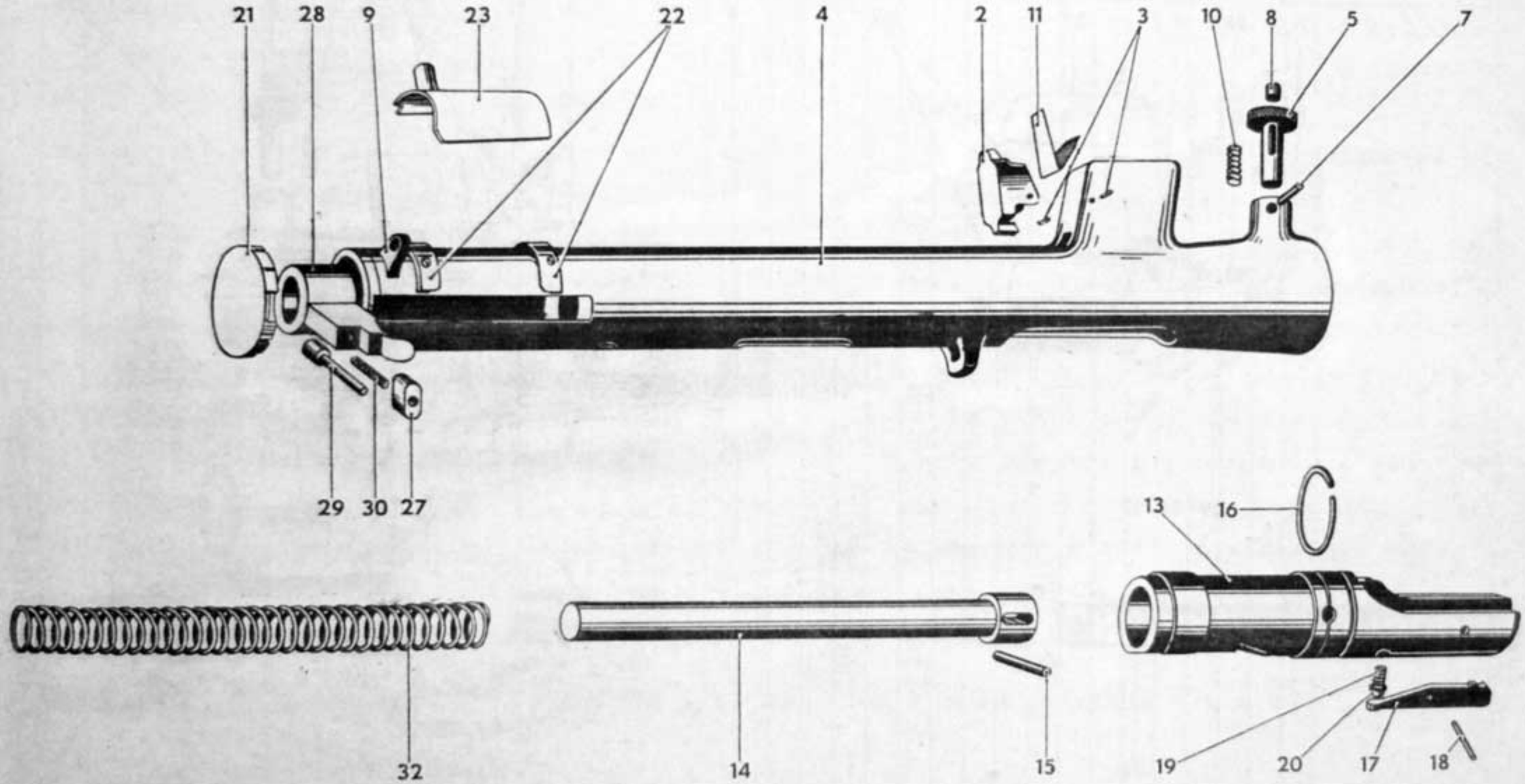
21
28
9
23
22
4
2
11
3
10
8
5
7
29
30
27
13
16
32
14
15
19
20
17
18

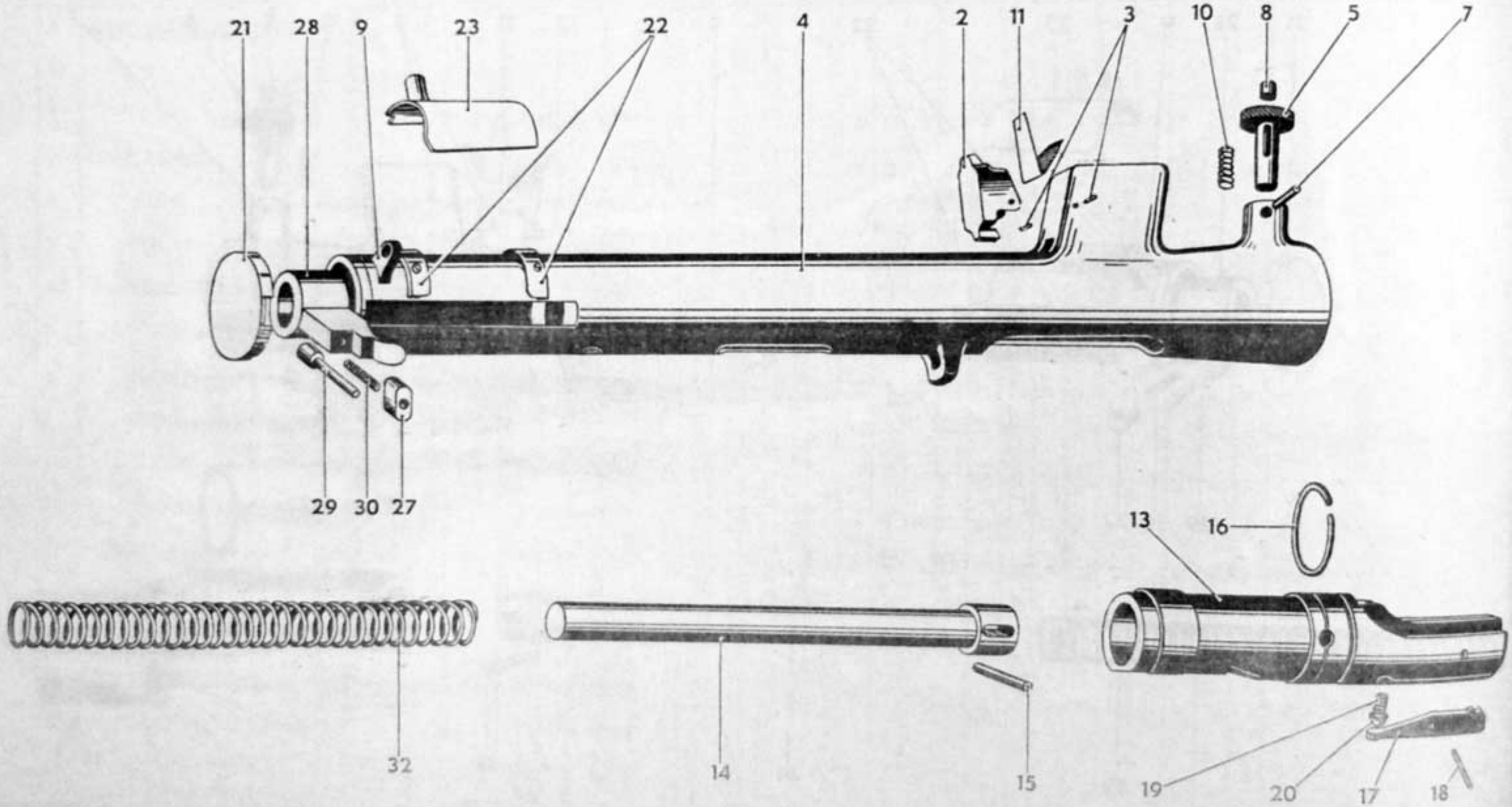
21
28
9
23
22
4
2
11
3
10
8
5
7
29
30
27
13
16
32
14
15
19
20
17
18

| ITEM OR PLATE NO. | DESIGNATION | Stock No. | No. OFF 4A | 4B | 4C | 4D | PRQ 5 | TYPE OF REPAIR 6 | 12 MTHS MTCE 100 EQPTS P 7 | W 8 | INITIAL STOCKS 1 MTH. LAD. 1 TO 5 | 6 TO 15 | 16 TO 30 | 2 MTHS. OFP. 1 TO 10 | 11 TO 25 | 26 TO 50 | 51 TO 100 | 2 MTHS WKSP STORES SEC. 1 TO 10 | 11 TO 25 | 26 TO 50 | 51 TO 100 | REMARKS |
|---|---|---|---|---|---|---|---|---|---|---|---|---|---|---|---|---|---|---|---|---|---|---|
| 1 | 2 | 3 | | | | | | | | | EQUIPMENTS 9 | 10 | 11 | 12 | 13 | 14 | 15 | 16 | 17 | 18 | 19 | 20 |
| B | BODY AND BOLT GROUP -(contd.) | | | | | | | | | | | | | | | | | | | | | |
| | BOLT, breech(contd.) | | | | | | | | | | | | | | | | | | | | | |
| 19 | SPRING, extractor | B3/CAA 1548 | 1 | | | | | U | 12 | 24 | x | x | 2 | x | x | 2 | 4 | x | x | 2 | 4 | |
| 20 | CAP | | 1 | | | | | | | | | | | | | | | | | | | B3/CAA 1106 |
| 21 | COVER, end, body | B3/CAA 1516 | 1 | | | | | U | 4 | 8 | x | x | x | x | x | x | 2 | x | x | x | 2 | |
| 22 | GUIDE,safety catch,front and rear | B3/BCA 0421 | 2 | | | | | B | 4 | 8 | | | | | | | | | | | | |
| 23 | SLIDE,safety catch | | 1 | | | | | | | | | | | | | | | | | | | B3/BCA 0422 |
| 24* | BALL | | 1 | | | | | | | | | | | | | | | | | | | |
| 25* | SPRING | | 1 | | | | | | | | | | | | | | | | | | | |
| 26* | HANDLE,cocking | B3/CAA 1520 | 1 | | | | | U | 2 | 5 | x | x | x | x | x | x | 1 | x | x | x | 2 | |
| 27 | CATCH, handle, cocking | B3/CAA 1511 | 1 | | | | | U | 3 | 5 | x | x | x | x | x | x | 1 | x | x | x | 2 | |
| 28 | HANDLE | | 1 | | | | | | | | | | | | | | | | | | | |
| 29 | PIN,locking(for handle cocking) | B3/CAA 1528 | 1 | | | | | U | 4 | 8 | x | x | 1 | x | x | x | 2 | x | x | x | 4 | |
| 30 | SPRING,handle cocking | B3/CAA 1549 | 1 | | | | | U | 5 | 10 | x | x | 2 | x | x | x | 4 | x | x | x | 4 | |
| 31* | SCREW,B.A. csk hd.,M.S.No.4 x 1/4in long | | | | | | | | | | | | | | | | | | | | | G1/GAA 6089 |
| 32 | SPRING,return,breech bolt | B3/CAA 1552 | 1 | | | | | U | 6 | 12 | x | x | 1 | x | x | x | 2 | x | x | x | 2 | |

| ITEM OR PLATE NO. | DESIGNATION | Stock No. | No. OFF 4A | 4B | 4C | 4D | PER | TYPE OF REPAIR | 12 MTHS MTCE 100 EQPTS I | W | INITIAL STOCKS 1 MTH. LAD. 1 TO 5 | 6 TO 15 | 16 TO 30 | 2 MTHS. OFF. 1 TO 10 | 11 TO 25 | 26 TO 50 | 51 TO 100 | 2 MTHS WKSP STORES SEC 1 TO 10 | 11 TO 25 | 26 TO 50 | 51 TO 100 | REMARKS |
|---|---|---|---|---|---|---|---|---|---|---|---|---|---|---|---|---|---|---|---|---|---|---|
| 1 | 2 | 3 | | | | | | 6 | 7 | 8 | 9 | 10 | 11 | 12 | 13 | 14 | 15 | 16 | 17 | 18 | 19 | 20 |
| C | HOUSING AND TRIGGER MECHANISM GROUP | | | | | | | | | | | | | | | | | | | | | |
| 1 | HOUSING, trigger mechanism | B3/CAA 1521 | 1 | | | | | F | 2 | 3 | | | | | | | | x | x | x | 2 | |
| 2 | PIN, stop, sear | B3/CAA 1535 | 1 | | | | | U | 2 | 4 | x | x | x | x | x | x | 1 | x | x | x | 2 | |
| 3* | LEVER, change | B3/CAA 1522SA | 1 | | | | | U | 2 | 3 | x | x | x | x | x | x | 1 | x | x | x | 2 | |
| 4 | LEVER | | 1 | | | | | | | | | | | | | | | | | | | |
| 5 | PLUNGER, ball | | 1 | | | | | | | | | | | | | | | | | | | |
| 6 | SPRING | | 1 | | | | | | | | | | | | | | | | | | | |
| 7 | PIN, axis, sear | B3/CAA 1524 | 1 | | | | | U | 5 | 10 | x | x | 1 | x | x | x | 2 | x | x | x | 4 | |
| 8 | PIN, axis, trigger | B3/CAA 1524 | 1 | | | | | U | - | - | - | - | - | - | - | - | - | - | - | - | - | REF C7 for Maint. Rat |
| 9 | PLATE, locking, axis pin | B3/CAA 1537 | 1 | | | | | U | 3 | 5 | x | x | x | x | x | x | 1 | x | x | x | 2 | |
| 10 | SEAR | B3/CAA 1544 | 1 | | | | | U | 3 | 5 | x | x | 1 | x | x | x | 2 | x | x | x | 2 | |
| 11 | SPRING, sear | B3/CAA 1553 | 1 | | | | | U | 5 | 10 | x | x | 1 | x | x | x | 2 | x | x | x | 2 | |
| 12 | SPRING, trigger, closure | B3/CAA 1555 | 1 | | | | | U | 5 | 10 | x | x | 1 | x | x | x | 2 | x | x | x | 2 | |
| 13 | TRIGGER | B3/CAA 1556 | 1 | | | | | U | 3 | 5 | x | x | x | x | x | x | 1 | x | x | x | 2 | |
| 14 | PIN, seating, trigger spring | B3/CAA 1533 | 1 | | | | | U | 5 | 10 | x | x | 1 | x | x | x | 2 | x | x | x | 4 | |
| 15 | BOLT, housing, trigger mechanism | B3/CAA 1505 | 1 | | | | | U | 2 | 3 | x | x | 1 | x | x | x | 2 | x | x | x | 2 | |
| 16 | WASHER, spring, shakeproof, I.T., 5/16in. | | 1 | | | | | U | | | | | | | | | | | | | | G1/CAA 4483 |

## HOUSING AND TRIGGER MECHANISM GROUP

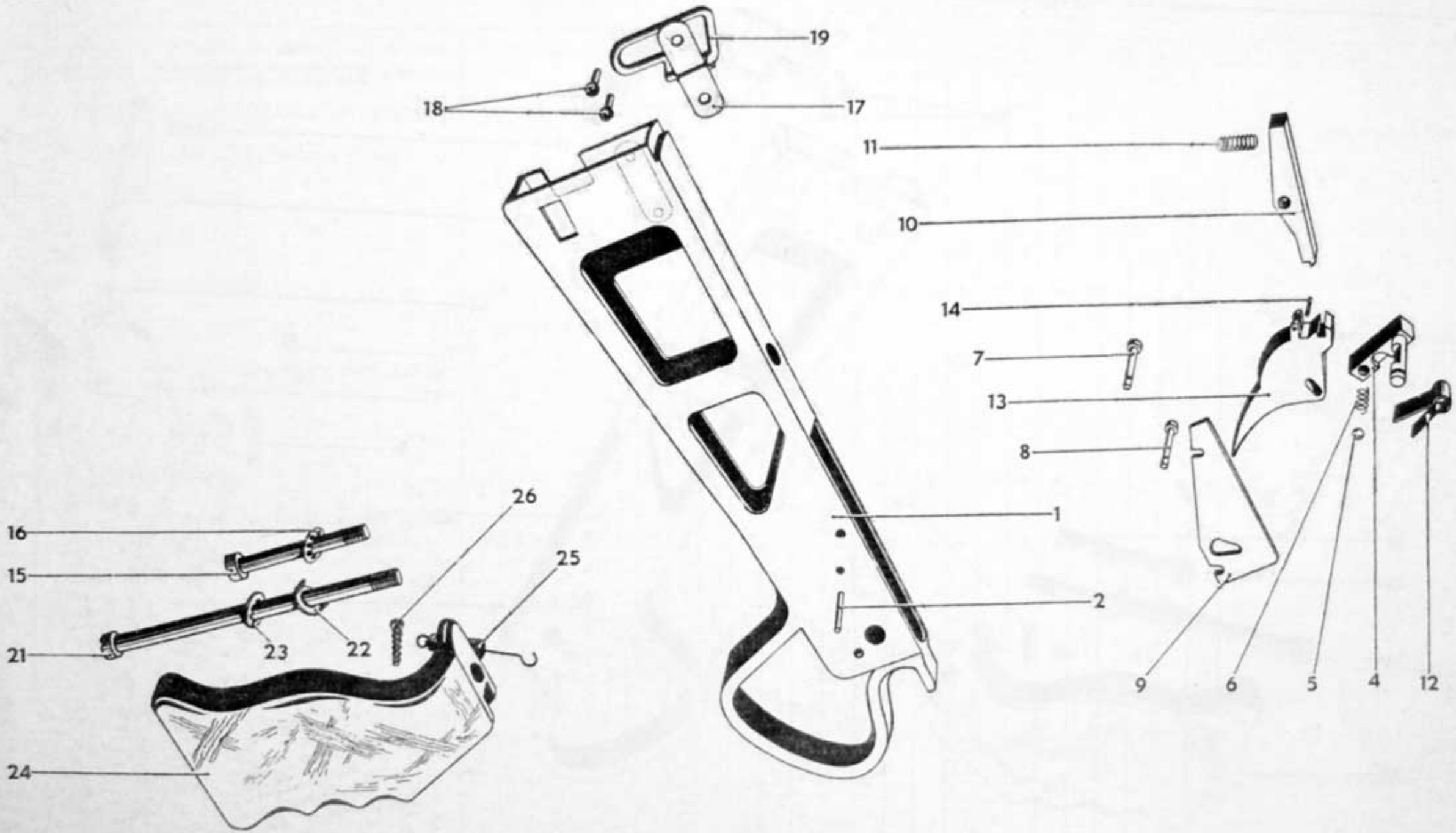

## HOUSING AND TRIGGER MECHANISM GROUP

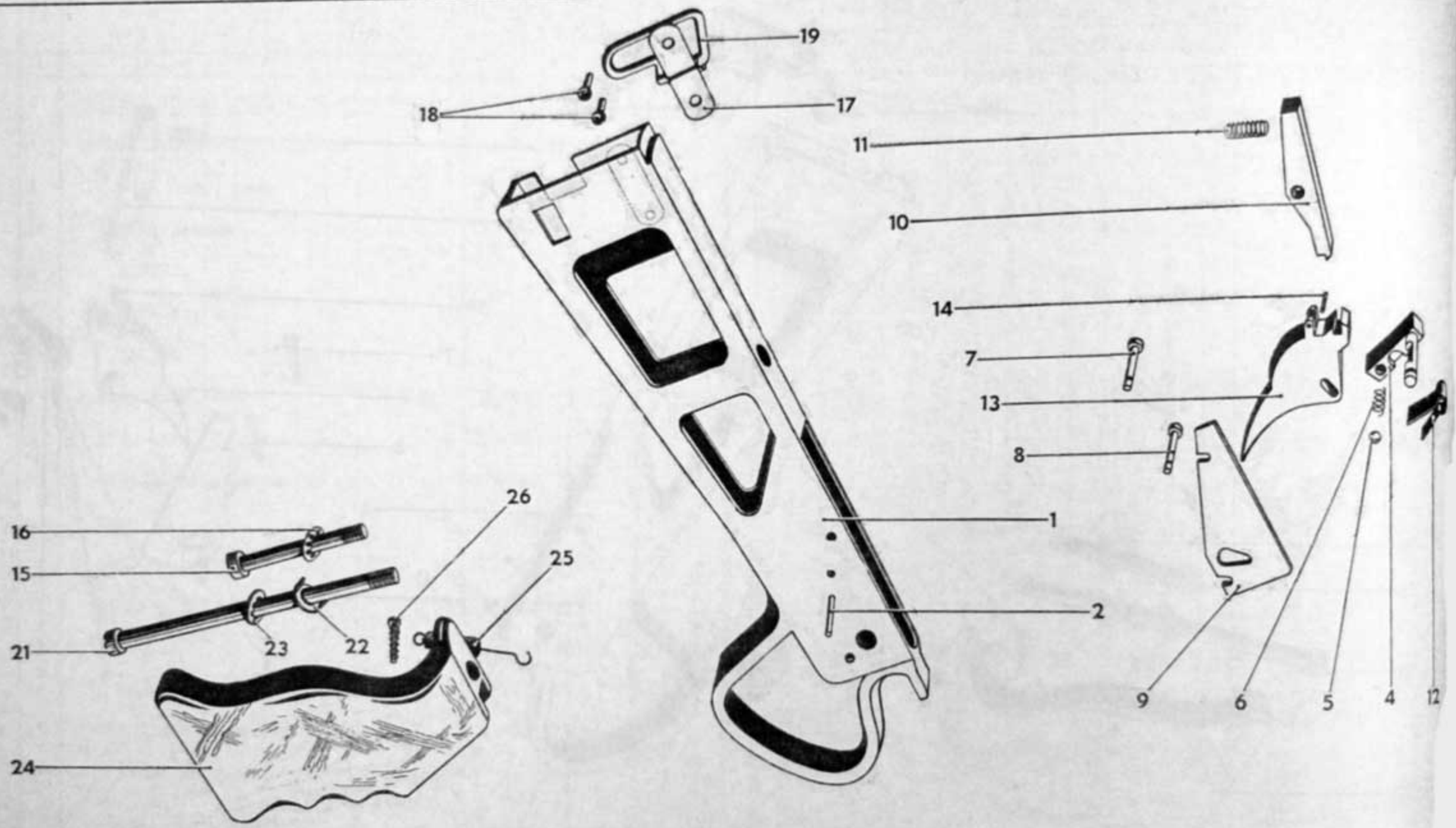

| ITEM OR PLATE No. | DESIGNATION | Stock No. | No. OFF 4A | 4B | 4C | 4D | QPP 5 | TYPE OF REPAIR 6 | 12 MTHS MTCE 100 EQPTS P 7 | W 8 | INITIAL STOCKS 1 MTH. LAD. 1 TO 5 | 6 TO 15 | 16 TO 30 | 2 MTHS. OFP 1 TO 10 | 11 TO 25 | 26 TO 50 | 51 TO 100 | 2 MTHS WKSP STORES SEC. 1 TO 10 | 11 TO 25 | 26 TO 50 | 51 TO 100 | REMARKS 20 |
|---|---|---|---|---|---|---|---|---|---|---|---|---|---|---|---|---|---|---|---|---|---|---|
| 1 | 2 | 3 | | | | | | | | | EQUIPMENTS 9 | 10 | 11 | 12 | 13 | 14 | 15 | 16 | 17 | 18 | 19 | |
| C | HOUSING AND TRIGGER MECHANISM (contd) | | | | | | | | | | | | | | | | | | | | | |
| 17 | BRACKET,retaining,rear sling swivel | B3/CAA 1506 | 1 | | | | | F | | | | | | | | | | | | | | Ref.A13 for Maint.Rate |
| 18 | RIVET,csk hd.,3/16in x 3/4in | | 2 | | | | | | | | | | | | | | | | | | | G1/GAA 3525 |
| 19 | SWIVEL, sling | | 1 | | | | | | | | | | | | | | | | | | | |
| 20 | GRIP, pistol | B3/CAA 1519 | 1 | | | | | U | 2 | 3 | x | x | x | x | x | x | 1 | x | x | x | 2 | |
| 21 | BOLT,pistol grip | B3/CAA 1504 | 1 | | | | | U | 2 | 4 | x | x | 1 | x | x | x | 2 | x | x | x | 2 | |
| 22 | WASHER, lock | B3/CAA 1558 | 1 | | | | | U | | | | | | | | | | | | | | Ref.A11 for Maint.Rate |
| 23 | WASHER,spring,shakeproof,I.T., 5/16-in | | 1 | | | | | | | | | | | | | | | | | | | G1/GAA 4483 |
| 24 | GRIP, pistol | | 1 | | | | | | | | | | | | | | | | | | | |
| 25 | SPRING, trigger | B3/CAA 1554 | 1 | | | | | U | 6 | 12 | x | x | 2 | x | x | x | 4 | x | x | x | 4 | |
| 26 | SCREW,self tapping,Parker Kalom, type Z,rd.hd.,No.4 x 5/8in | Z2/ZBA 0130 | 1 | | | | | U | 4 | 6 | x | x | 1 | x | x | x | 2 | x | x | x | 2 | |

| ITEM OR PLATE NO. | DESIGNATION | Stock No. | No. OFF 4A | 4B | 4C | 4D | U.O.Q. | TYPE OF REPAIR | 12 MTHS MTCE 100 EQPTS P | W | INITIAL STOCKS: 1 MTH. LAD. 1 TO 5 | 6 TO 15 | 16 TO 30 | 2 MTHS. OFP. 1 TO 10 | 11 TO 25 | 26 TO 50 | 51 TO 100 | 2 MTHS WKSP STORES SEC 1 TO 10 | 11 TO 25 | 26 TO 50 | 51 TO 100 | REMARKS |
|---|---|---|---|---|---|---|---|---|---|---|---|---|---|---|---|---|---|---|---|---|---|---|
| 1 | 2 | 3 | 4A | 4B | 4C | 4D | 5 | 6 | 7 | 8 | 9 | 10 | 11 | 12 | 13 | 14 | 15 | 16 | 17 | 18 | 19 | 20 |
| D | BUTT, GROUP | | | | | | | | | | | | | | | | | | | | | |
| 1* | BUTT, wood, Mk.3 | B3/CAA 1079A | 1 | | | | | U | 3 | 5 | x | x | 1 | x | x | x | 2 | x | x | x | 2 | |
| 2 | BOLT | B3/CAA 1562 | 1 | | | | | U | | | | | | | | | | | | | | |
| 3 | WASHER, spring, shakeproof, I.T., 5/16in | | 1 | | | | | | | | | | | | | | | | | | | G1/GAA 4483 |
| 4* | BRACKET, butt | B3/CAA 1561 SA | 1 | | | | | U | 3 | 5 | x | x | 1 | x | x | x | 2 | x | x | x | 2 | |
| 5 | FRAME | | 1 | | | | | | | | | | | | | | | | | | | |
| 6 | LEVER, catch | B3/CAA 1510 | 1 | | | | | U | 2 | 3 | x | x | x | x | x | x | 1 | x | x | x | 2 | |
| 7 | PIN, axis, catch | B3/CAA 1525 | 1 | | | | | U | 3 | 5 | x | x | 1 | x | x | x | 2 | x | x | x | 2 | |
| 8 | PIN, stop, catch, butt | B3/CAA 1534 | 1 | | | | | U | 2 | 3 | x | x | x | x | x | x | 1 | x | x | x | 2 | |
| 9 | SPRING, return, catch | B3/CAA 1546 | 1 | | | | | U | 5 | 10 | x | x | 1 | x | x | 2 | 4 | x | x | 2 | 4 | |
| 10 | BUTT | B3/CAA 1108 | 1 | | | | | U | 2 | 3 | x | x | x | x | x | x | 1 | x | x | x | 2 | |
| 11 | PIN | | 2 | | | | | | | | | | | | | | | | | | | |
| 12 | WASHER | | 4 | | | | | | | | | | | | | | | | | | | |
| 13* | TRAP | B3/CAA 1081 SA | 1 | | | | | U | 2 | 3 | x | x | x | x | x | x | 1 | x | x | x | 2 | |
| 14 | BASE, trap, butt (butt Mk.3) | B3/BCA 0416 | 1 | | | | | U | 2 | 3 | x | x | 1 | x | x | x | 2 | x | x | x | 2 | |
| 15 | SCREW, iron, flathead, No.6 x 1in | | 2 | | | | | | | | | | | | | | | | | | | |
| 16 | FLAP, trap (butt Mk.3) | B3/BCA 0418 | 1 | | | | | U | 3 | 5 | x | x | 1 | x | x | x | 2 | x | x | x | 2 | G1/GA 1325 |

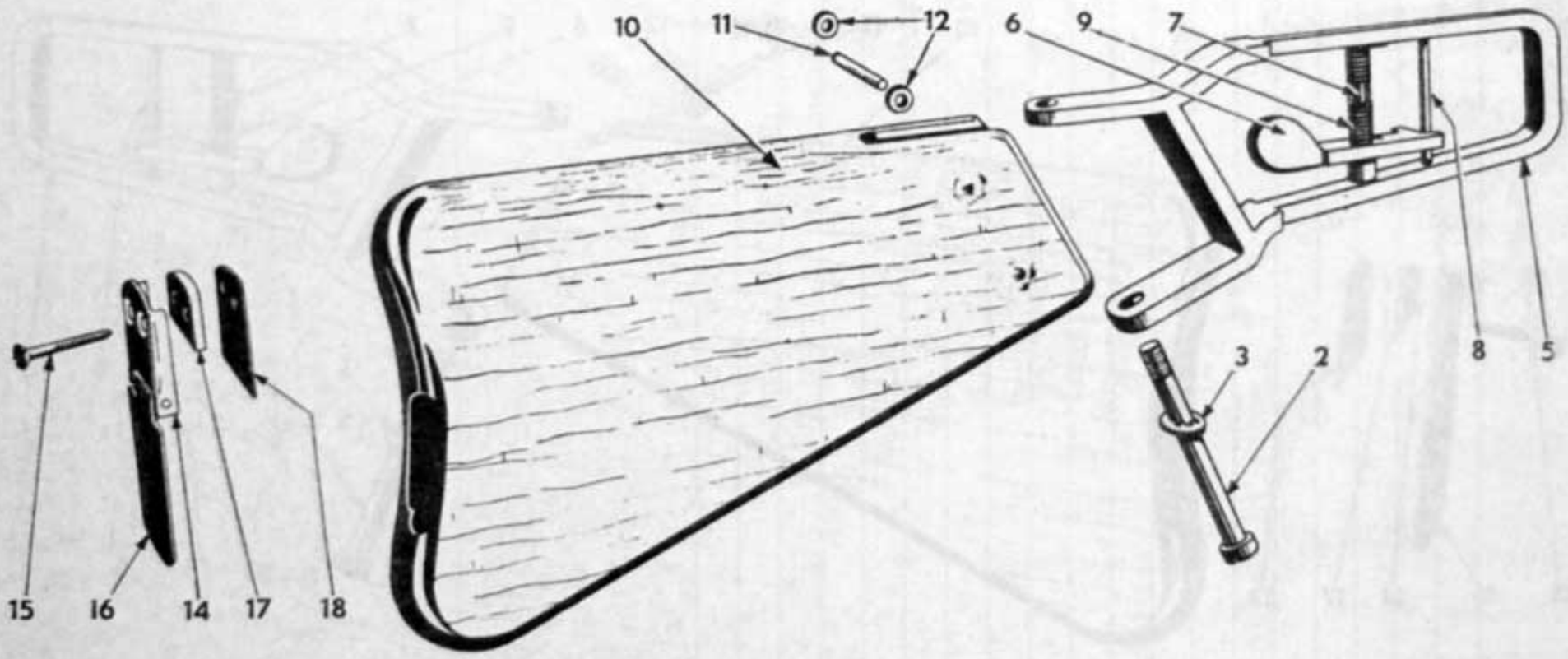
10
11
12
6
9
7
3
2
8
5
15
16
14
17
18

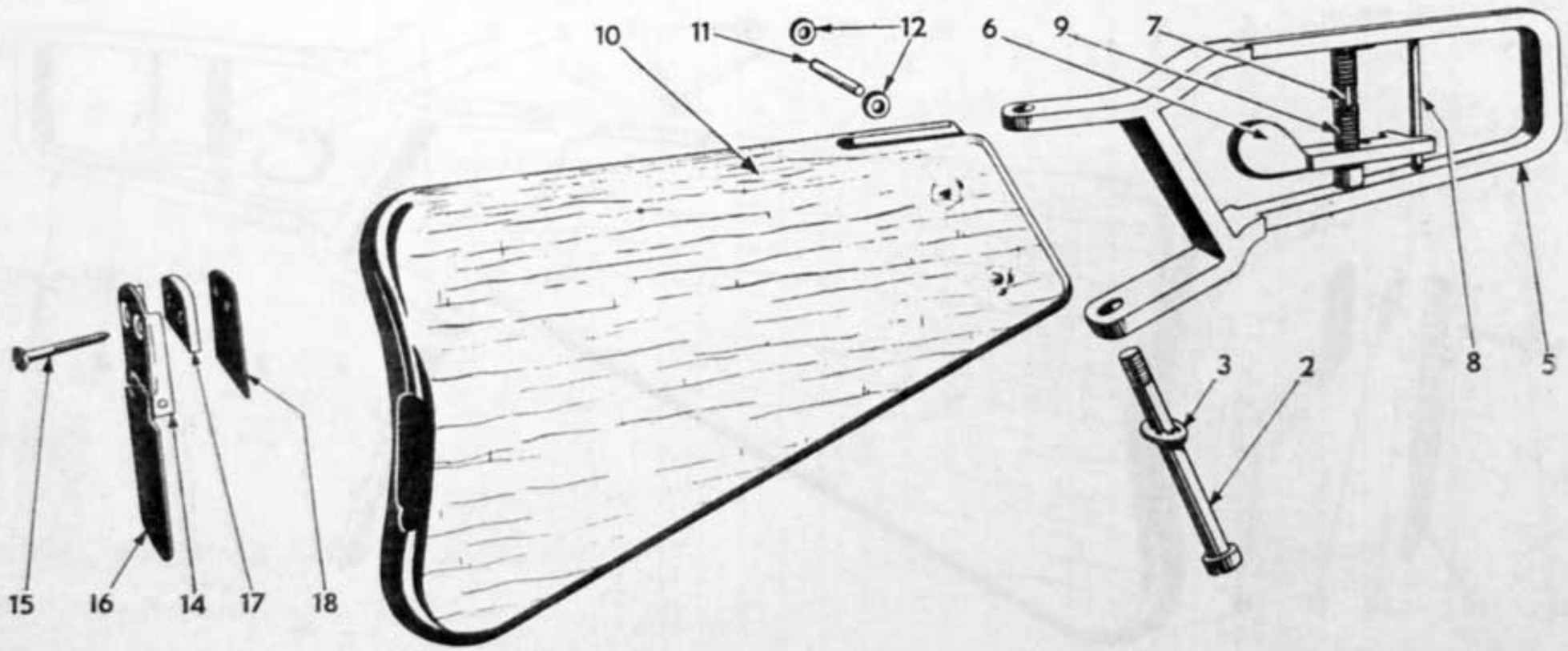
10
11
12
6
9
7
8
5
3
2
15
16
14
17
18

| ITEM OR PLATE NO. | DESIGNATION | Stock No. | No. OFF 4A | 4B | 4C | 4D | P.P.Q. 5 | TYPE OF REPAIR 6 | 12 MTHS MTCE 100 EQPTS P 7 | W 8 | INITIAL STOCKS: 1 MTH LAD. 1 TO 5 9 | 6 TO 15 10 | 16 TO 30 11 | 2 MTHS OFP. 1 TO 10 12 | 11 TO 25 13 | 26 TO 50 14 | 51 TO 100 15 | 2 MTHS WKSP STORES SEC. 1 TO 10 16 | 11 TO 25 17 | 26 TO 50 18 | 51 TO 100 19 | REMARKS 20 |
|---|---|---|---|---|---|---|---|---|---|---|---|---|---|---|---|---|---|---|---|---|---|---|
| 1 | 2 | 3 | | | | | | | | | EQUIPMENTS | | | | | | | | | | | |
| D | BUTT, GROUP - (contd.) | | | | | | | | | | | | | | | | | | | | | |
| | TRAP (contd.) | | | | | | | | | | | | | | | | | | | | | |
| 17 | PIECE, packing | B3/BCA 0417 | 1 | | | | | U | 2 | 3 | x | x | x | x | x | x | 1 | x | x | x | 2 | |
| 18 | SPRING | B3/CAA 1109 | 1 | | | | | U | 2 | 3 | x | x | x | x | x | x | 1 | x | x | x | 2 | |

| ITEM OR PLATE NO. | DESIGNATION | Stock No. | No. OFF 4A | 4B | 4C | 4D | P P Q | TYPE OF REPAIR | 12 MTHS MTCE 100 EQPTS P | W | INITIAL STOCKS: 1 MTH. LAD. 1 TO 5 | 6 TO 15 | 16 TO 30 | 2 MTHS. OFP. 1 TO 10 | 11 TO 25 | 26 TO 50 | 51 TO 100 | 2 MTHS WKSP STORES SEC. 1 TO 10 | 11 TO 25 | 26 TO 50 | 51 TO 100 | REMARKS |
|---|---|---|---|---|---|---|---|---|---|---|---|---|---|---|---|---|---|---|---|---|---|---|
| 1 | 2 | 3 | 4A | 4B | 4C | 4D | 5 | 6 | 7 | 8 | EQUIPMENTS 9 | 10 | 11 | 12 | 13 | 14 | 15 | 16 | 17 | 18 | 19 | 20 |
| E | BAYONET AND SCABBARD GROUP | | | | | | | | | | | | | | | | | | | | | |
| 1* | BAYONET,SMG(AUST)No.1,Mk.1 | B3/BAA 0201 | 1 | | | | | U | 2 | 4 | x | x | x | x | x | x | 1 | x | x | x | 2 | 10-in long |
| 2 | BLADE | | 1 | | | | | | | | | | | | | | | | | | | |
| 3 | BOLT | B1/BB 0024 | 1 | | | | | U | 4 | 6 | x | x | 1 | x | x | x | 2 | x | x | x | 2 | |
| 4 | NUT | B1/BB 0033 | 1 | | | | | U | 4 | 6 | x | x | 1 | x | x | x | 2 | x | x | x | 2 | |
| 5 | GRIP, left | B1/BB 0025 | 1 | | | | | U | 6 | 8 | x | x | 1 | x | x | x | 2 | x | x | x | 2 | Issued in pairs |
| 6 | GRIP, right | B1/BB 0025 | 1 | | | | | U | | | | | | | | | | | | | | |
| 7 | SCREW, securing, grip | B1/BB 0035 | 2 | | | | | U | 6 | 12 | x | x | 2 | x | x | x | 4 | x | x | x | 4 | |
| 8 | NUT | B1/BB 0034 | 2 | | | | | U | 6 | 12 | x | x | 2 | x | x | x | 4 | x | x | x | 4 | |
| 9 | SPRING, bolt | B1/BB 0036 | 1 | | | | | U | 6 | 12 | x | x | 1 | x | x | 2 | 4 | x | x | x | 4 | |
| 10* | SCABBARD,BAYONET,SMG(AUST)Mk.1 | B3/BAA 3649 | 1 | | | | | U | 2 | 4 | x | x | x | x | x | x | 1 | x | x | x | 2 | |
| 11 | CHAPE | B1/BB 1212 | 1 | | | | | B | 3 | 5 | | | | | | | | | | | | |
| 12 | LACE, long | B1/BB 1213 | 1 | | | | | B | 20 | 40 | | | | | | | | | | | | |
| 13 | LACE, short | B1/BB 1214 | 1 | | | | | B | 40 | 80 | | | | | | | | | | | | |
| 14 | LEATHER | B3/BCA 2200 | 1 | | | | | B | 3 | 5 | | | | | | | | | | | | |
| 15 | LOCKET | B1/BB 1216 | 1 | | | | | B | 2 | 4 | | | | | | | | | | | | |
| 16 | LACE, short | B1/BB 1214 | 2 | | | | | B | | | | | | | | | | | | | | Ref.E13,for Maint.Rate |
| 17 | SPRING (or) | | 2 | | | | | | | | | | | | | | | | | | | |

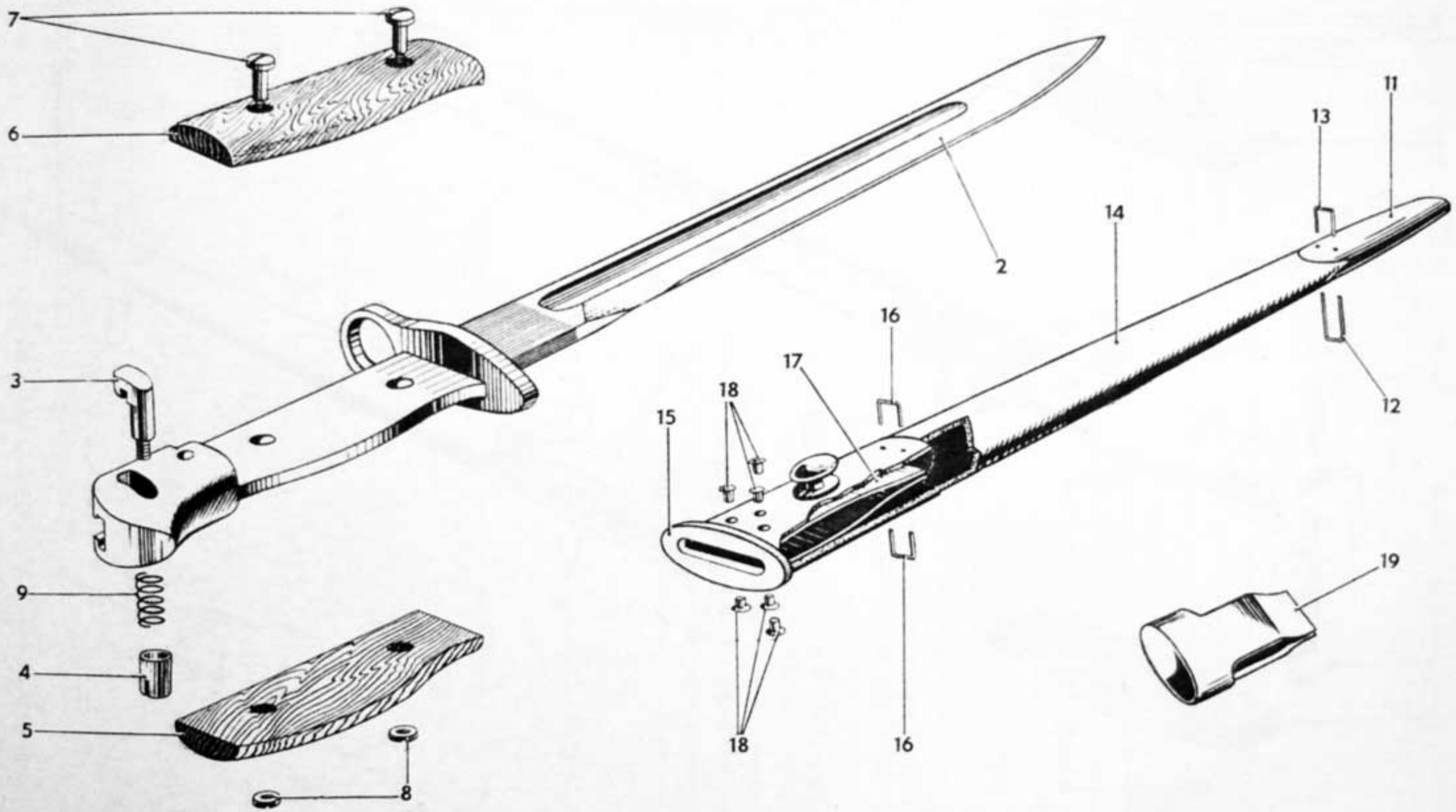
7
6
2
11
13
14
16
17
18
15
12
3
9
4
5
8
18
16
19

# BAYONET AND SCABBARD GROUP

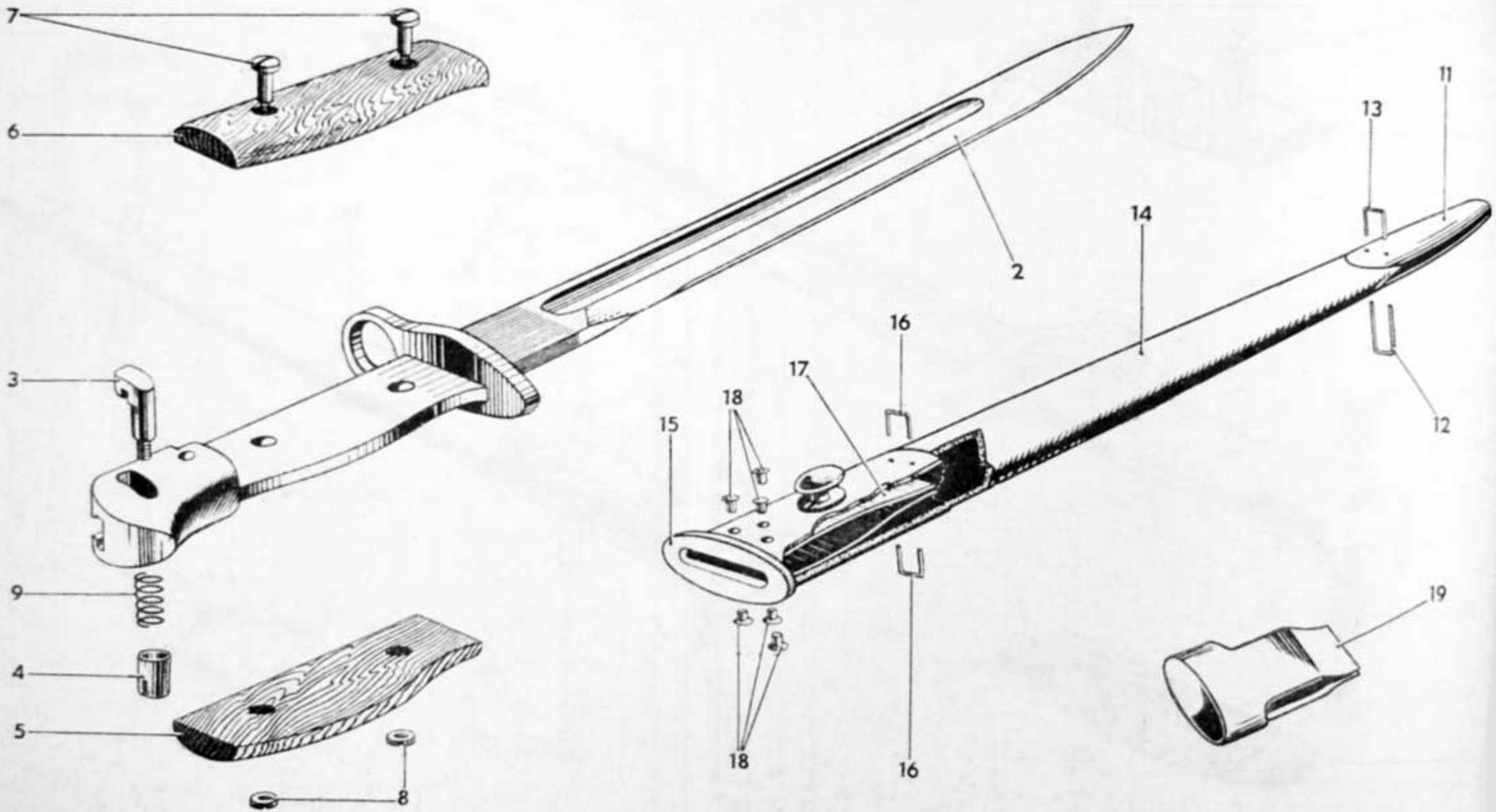

| ITEM OR PLATE No. | DESIGNATION | Stock No. | No. OFF 4A | 4B | 4C | 4D | P Q | TYPE OF REPAIR | 12 MTHS MICE 100 EQPTS P | W | INITIAL STOCKS 1 MTH LAD 1 TO 5 | 6 TO 15 | 16 TO 30 | 2 MTHS OFP 1 TO 10 | 11 TO 25 | 26 TO 50 | 51 TO 100 | 2 MTHS WKSP STORES SEC 1 TO 10 | 11 TO 25 | 26 TO 50 | 51 TO 100 | REMARKS |
|---|---|---|---|---|---|---|---|---|---|---|---|---|---|---|---|---|---|---|---|---|---|---|
| 1 | 2 | 3 | | | | | | | | | EQUIPMENTS 9 | 10 | 11 | 12 | 13 | 14 | 15 | 16 | 17 | 18 | 19 | 20 |
| E | BAYONET AND SCABBARD GROUP - (cont.) | | | | | | | | | | | | | | | | | | | | | |
| | SCABBARD, BAYONET, S.M.G. (AUST.)Mk 1 (cont.) | | | | | | | | | | | | | | | | | | | | | |
| | LOCKET (cont.) | | | | | | | | | | | | | | | | | | | | | |
| | SPRING (cont.) | | | | | | | | | | | | | | | | | | | | | |
| 18 | RIVET | | | | | | | | | | | | | | | | | | | | | |
| 19 | SPRING | | | | | | | | | | | | | | | | | | | | | |

| ITEM OR PLATE NO. | DESIGNATION | Stock No. | No. OFF 4A | 4B | 4C | 4D | P O Q 5 | TYPE OF REPAIR 6 | 12 MTHS MTCE 100 EQPTS P 7 | W 8 | INITIAL STOCKS: 1 MTH. LAD. 1 TO 5 9 | 6 TO 15 10 | 16 TO 30 11 | 2 MTHS. OFP. 1 TO 10 12 | 11 TO 25 13 | 26 TO 50 14 | 51 TO 100 15 | 2 MTHS WKSP STORES SEC. 1 TO 10 16 | 11 TO 25 17 | 26 TO 50 18 | 51 TO 100 19 | REMARKS 20 |
|---|---|---|---|---|---|---|---|---|---|---|---|---|---|---|---|---|---|---|---|---|---|---|
| | | | | | | | | | | | EQUIPMENTS | | | | | | | | | | | |
| F | ACCESSORIES | | | | | | | | | | | | | | | | | | | | | |
| 1* | BOTTLE,oil,Mk.4 (or) | B1/BA 0053 | 1 | | | | | U | 10 | 15 | x | x | 2 | x | x | x | 4 | x | x | x | 4 | Brass,leather washer, stopper and spoon |
| 2* | BOTTLE,oil,Mk.5 | CLASS 1005-66-100-2009 | 1 | | | | | U | | | | | | | | | | | | | | Bakelite or plastic Ref.F1,for Maint.Rate |
| 3 | BODY | | 1 | | | | | | | | | | | | | | | | | | | |
| 4 | STOPPER,with rod | | 1 | | | | | | | | | | | | | | | | | | | |
| 5 | WASHER | | 1 | | | | | | | | | | | | | | | | | | | |
| 6* | BRUSH,cleaning,M.G.(AUST)Mk.1/1 | C1/CAA 0221 | 1 | | | | | U | 12 | 24 | 1 | 2 | 3 | x | x | 4 | 6 | x | x | 4 | 6 | |
| 7* | COVER,muzzle,SA(Aust)No.1,Mk.1/1(or) | B1/BAA 0404 | 1 | | | | | U | 12 | 24 | x | x | 2 | x | x | 2 | 4 | x | x | 2 | 4 | |
| 8* | COVER,muzzle,SA(Aust)No.1,Mk.1 | B1/AAA 0447 | 1 | | | | | U | | | | | | | | | | | | | | Ref F7 for Maint.Rate |
| 9* | CHESTS,Owen,Machine,Mk.1/1 | B3/BCA 0426 | 1/R | | | | | U | 3 | 5 | x | x | x | x | x | x | 1 | x | x | x | 2 | 1 Per 3 Equipments |
| 10* | MAGAZINE | B3/CAA 1523A | 10 | | | | | U | 75 | 150 | 2 | 4 | 6 | 4 | 4 | 4 | 8 | 4 | 4 | 4 | 8 | |
| 11 | CASE,magazine,9-mm,Owen | B3/CAA 1509 | 1 | | | | | U | 5 | 10 | x | x | 1 | x | x | x | 2 | x | x | x | 4 | |
| 12 | PLATE,retaining,spring | B3/CAA 1536 | 1 | | | | | U | 2 | 3 | x | x | x | x | x | x | 1 | x | x | x | 2 | |
| 13 | PLATE,locking | B3/CAA 1539 | 1 | | | | | U | 3 | 5 | x | x | x | x | x | x | 1 | x | x | x | 2 | |
| 14 | PLATFORM | B3/CAA 1538 | 1 | | | | | U | 4 | 6 | x | x | 1 | x | x | x | 2 | x | x | x | 4 | |
| 15 | SPRING, platform | B3/CAA 1550 | 1 | | | | | U | 12 | 24 | x | x | 2 | x | x | x | 4 | x | x | x | 4 | |
| 16 | PULL THROUGH,SMG,"B"(without gauze) | B3/BAA 3009 | 1 | | | | | U | 15 | 25 | 1 | 2 | 2 | 2 | 4 | 6 | 8 | 2 | 4 | 6 | 8 | |

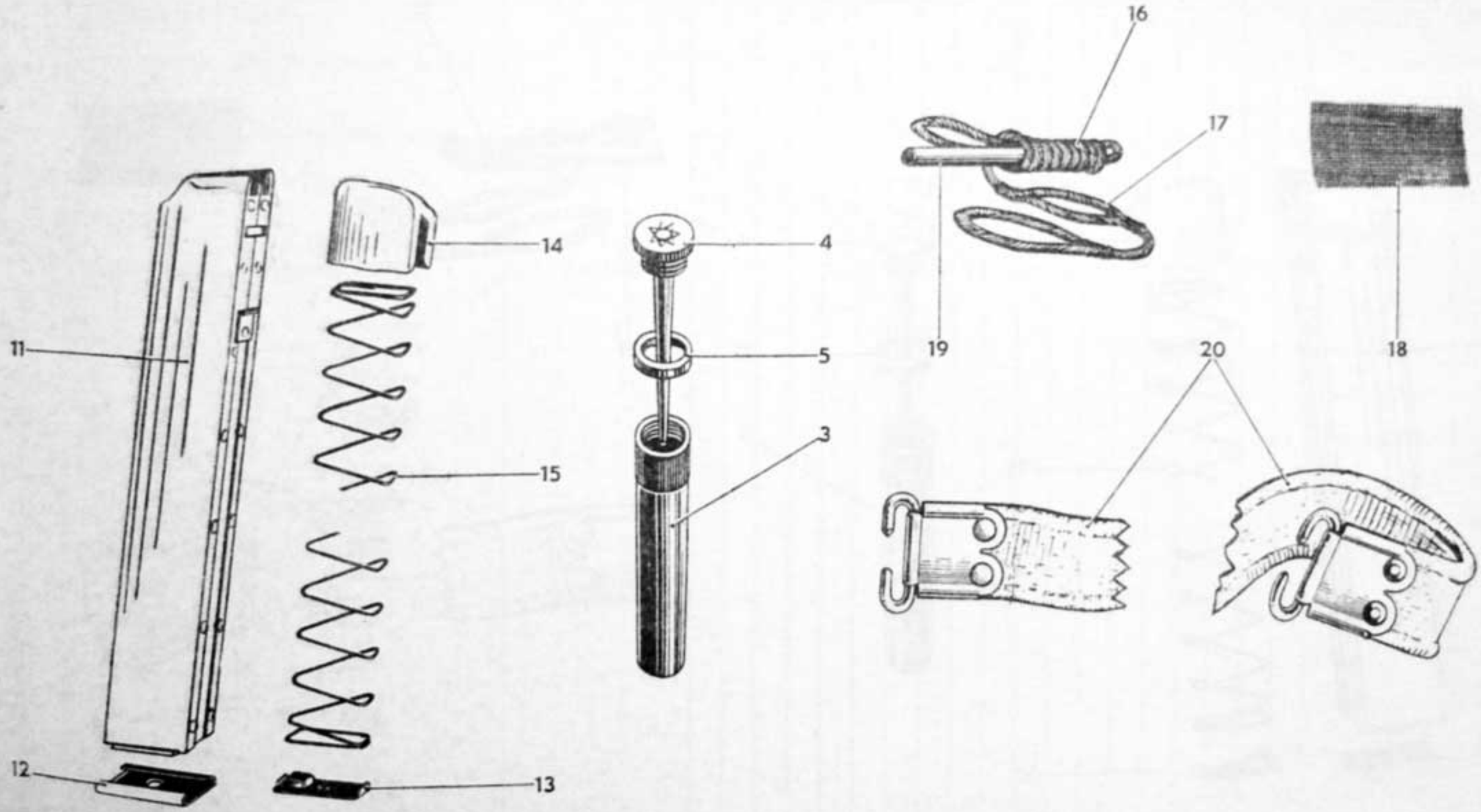
16
17
14
4
11
5
19
20
18
3
15
12
13

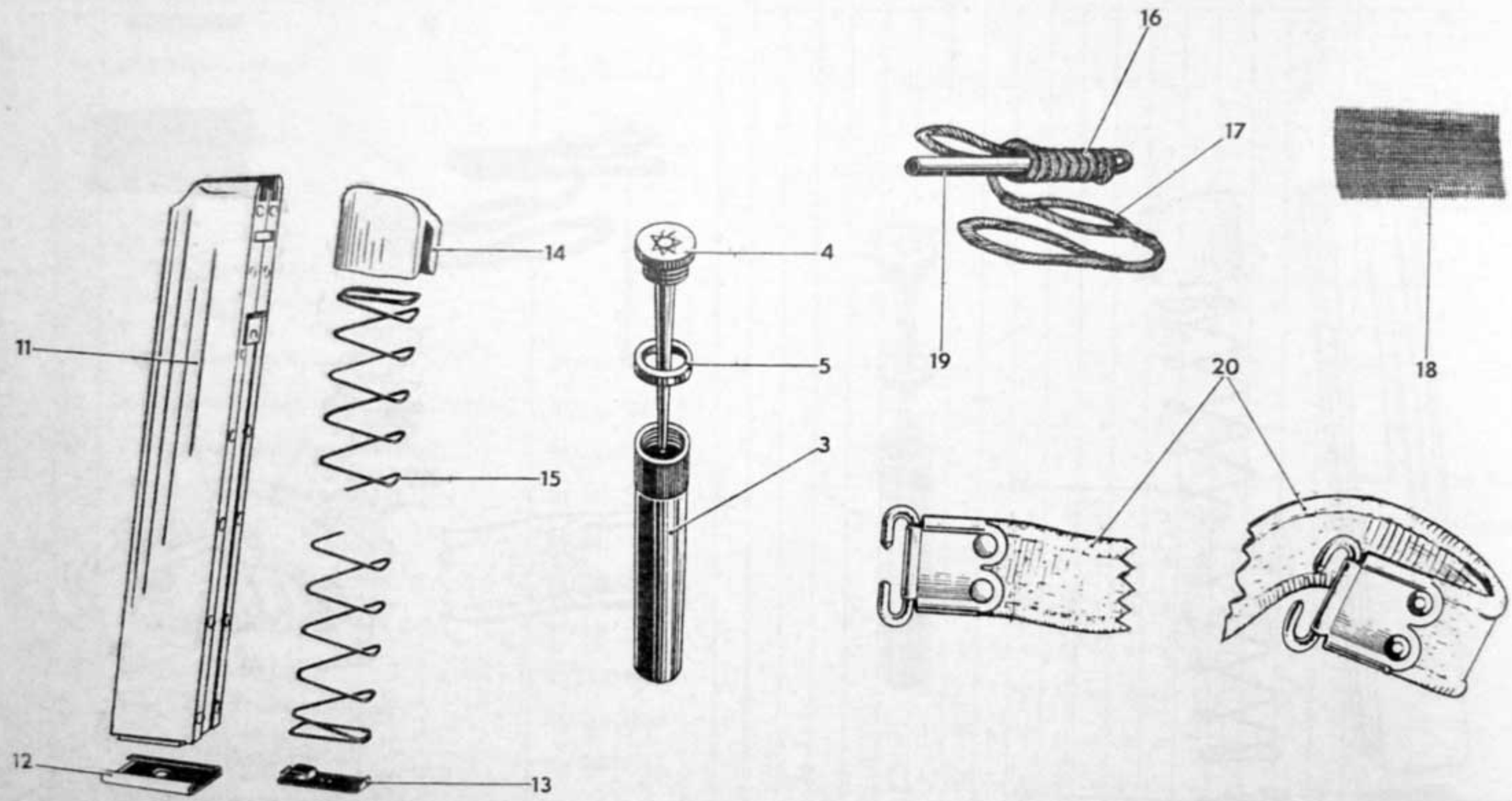
16
17
14
4
11
5
19
18
20
3
15
12
13

| ITEM OR PLATE NO. | DESIGNATION | Stock No. | No. OFF 4A | 4B | 4C | 4D | PPQ 5 | TYPE OF REPAIR 6 | 12 MTHS MTCE 100 EQPTS P 7 | W 8 | INITIAL STOCKS: 1 MTH. LAD. 1 TO 5 (9) | 6 TO 15 (10) | 16 TO 30 (11) | 2 MTHS. OFP. 1 TO 10 (12) | 11 TO 25 (13) | 26 TO 50 (14) | 51 TO 100 (15) | 2 MTHS WKSP STORES SEC. 1 TO 10 (16) | 11 TO 25 (17) | 26 TO 50 (18) | 51 TO 100 (19) | REMARKS 20 |
|---|---|---|---|---|---|---|---|---|---|---|---|---|---|---|---|---|---|---|---|---|---|---|
| 1 | 2 | 3 | | | | | | | | | EQUIPMENTS | | | | | | | | | | | |
| | ACCESSORIES (contd.) | | | | | | | | | | | | | | | | | | | | | |
| | PULL THROUGH,SMG,"B"(without gauze) - (contd.) | | | | | | | | | | | | | | | | | | | | | |
| 17 | CORD,machine,carbine,pullthrough | B3/BAA 3010 | 1 | | | | | U | 25 | 50 | 1 | 2 | 3 | 2 | 4 | 4 | 6 | 4 | 4 | 8 | 8 | |
| 18 | GAUZE | B1/BB 0521 | 1 | | | | | U | 50 | 50 | 2 | 4 | 6 | 4 | 4 | 6 | 8 | 4 | 4 | 8 | 8 | |
| 19 | WEIGHT | | 1 | | | | | U | | | | | | | | | | | | | | B1/BB 0522 |
| 20 | SLING, S.M.G.,web(Aust) 57-in. | B3/CAA 3600 | 1 | | | | | U | 10 | 20 | x | x | 1 | x | x | 2 | 2 | x | x | 4 | 4 | |

NUMERICAL INDEX TO MAINTENANCE SCALES AUST/SA/106/2



| Stock No. | ITEM | AMENDMENT | Stock No. | ITEM | AMENDMENT |
|---|---|---|---|---|---|
| 1005-66-100-2009 | F2 | | B1/BB 1216 | E15 | |
| B1/AAA 0447 | F8 | | B3/BAA 0201 | E1 | |
| B1/BA 0053 | F1 | | " " 3009 | F16 | |
| B1/BAA 0404 | F7 | | " " 3010 | F17 | |
| B1/BB 0024 | E3 | | " " 3649 | E10 | |
| B1/BB 0025 | E5 | | B3/BCA 0416 | D14 | |
| " " " | E6 | | " " 0417 | D17 | |
| " " 0033 | E4 | | " " 0418 | D16 | |
| " " 0034 | E8 | | " " 0421 | B22 | |
| " " 0035 | E7 | | " " 0426 | F9 | |
| " " 0036 | E9 | | " " 2200 | E14 | |
| " " 0521 | F18 | | B3/CAA 1079A | D1 | |
| " " 1212 | E11 | | " " 1081 SA | D13 | |
| " " 1213 | E12 | | " " 1108 | D10 | |
| " " 1214 | E13 | | " " 1109 | D18 | |
| " " " | E16 | | " " 1121 | A3 | |

NUMERICAL INDEX TO MAINTENANCE SCALES AUST/SA/106/2



| Stock No. | ITEM | AMENDMENT | Stock No. | ITEM | AMENDMENT |
|---|---|---|---|---|---|
| B3/CAA 1501A | B12 | | B3/CAA 1521 | C1 | |
| " " 1502 | B14 | | " " 1522 SA | B3 | |
| " " 1504 | C21 | | " " 1523 A | F10 | |
| " " 1505 | C15 | | " " 1524 | C7 | |
| " " 1506 | A13 | | " " " | C8 | |
| " " " | C17 | | " " 1525 | D7 | |
| " " 1509 | F11 | | " " 1526 | B5 | |
| " " 1510 | D6 | | " " 1527 | B6 | |
| " " 1511 | B27 | | " " 1528 | B29 | |
| " " 1512 | B2 | | " " 1529 | B15 | |
| " " 1513 | B8 | | " " 1531 | B18 | |
| " " 1514 | B16 | | " " 1532 | B7 | |
| " " 1516 | B21 | | " " 1533 | C14 | |
| " " 1517 | B17 | | " " 1534 | D8 | |
| " " 1519 | C20 | | " " 1535 | C2 | |
| " " 1520 | B26 | | " " 1536 | F12 | |
| | | | " " 1537 | C9 | |

NUMERICAL INDEX TO MAINTENANCE SCALES AUST/SA/106/2



| Stock No. | | ITEM | AMENDMENT |
|---|---|---|---|
| B3/CAA | 1538 | F14 | |
| " " | 1539 | F13 | |
| " " | 1540 | B3 | |
| " " | 1544 | C10 | |
| " " | 1546 | D9 | |
| " " | 1547 | B11 | |
| " " | 1548 | B19 | |
| " " | 1549 | B30 | |
| " " | 1550 | F15 | |
| " " | 1551 | B10 | |
| " " | 1552 | B32 | |
| " " | 1553 | C11 | |
| " " | 1554 | C25 | |
| " " | 1555 | C12 | |
| " " | 1556 | C13 | |
| " " | 1558 | A11 | |
| " " | " | C22 | |

| Stock No. | | ITEM | AMENDMENT |
|---|---|---|---|
| B3/CAA | 1561 SA | D4 | |
| " " | 1562 | D2 | |
| " " | 1564 | A10 | |
| " " | 1566 | A9 | |
| " " | 3600 | F20 | |
| C1/CAA | 0221 | F6 | |
| Z2/ZBA | 0129 | A14 | |
| " " | 0130 | C26 | |

/ER
Australian Military Forces

From .....

To: DOS, AHQ

AAF F132

Revised Mar 1950

SCALES CHANGE REQUEST

Australian Maintenance Scale Number .....

Date of Publication .....

Type of Equipment .....

Total Number in formation .....

Number held in formation reserves .....

Theatre of operations .....

It is recommended, as a result of user's experience that the quantities scaled of the undermentioned items be increased, decreased, included or as shown for the reasons given *

* Strike out the words not applicable

| Item Number in Scale | Nomenclature | Sec/Cat. No. | Total Number of Parts issued in a stated period | | Suggested Scale | | | Remarks State if normal maintenance special projects, etc. |
|---|---|---|---|---|---|---|---|---|
| | | | Number Issued | Period Months | Qty. | Period Months | No. of Eqpts. | |
| | | | | | | | | |